Sprint

FLAMINIA.

design **FLAMINIA DESIGN TEAM** **2006**

SR64L Sprint 64

Basin 64 cm wall hung or suitable for pedestal

•WITH OVERFLOW •ARRANGED FOR THREE HOLES TAP

Complements: **Sprint ceramic pedestal** (SR50S)
Sprint wall-mounted ceramic pedestal (SR50CS)
Line taps basin: ONE - NOKE' - FOLD
Line accessories: TWO - HOOP - NOKE' - FOLD

Technical accessories: **Chrome siphon** (SIFL/CR) - **Telescopic chrome siphon** (SIFL066)
Stop & Go drain (PLSG)
CERAMIC Stop & Go drain (PLCE)
Two piece set chrome tap filters (RF026)
Fixing kit for wall (9002)

Package dim. **65,5 x 22 x 53,5 cm** | Weight **18,3 kg** | Pz. Pallet n° **20**

WHILE STOCKS LAST

CE UNI EN 14688 - CL20 **Dop-No14688**

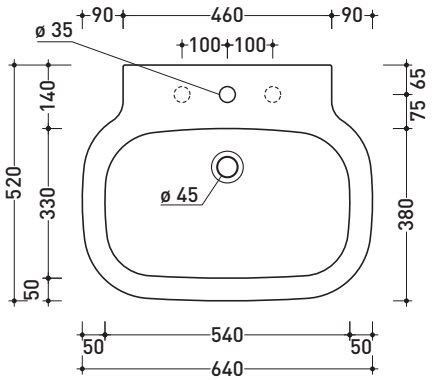

vista zenitale / zenital view

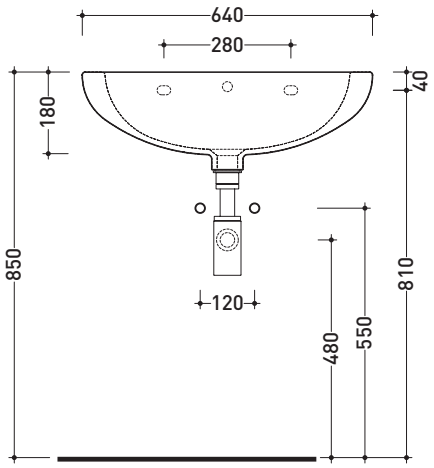

vista frontale / frontal view

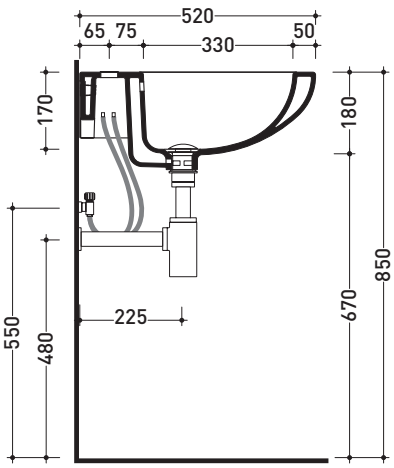

sezione longitudinale / section

sizes in mm

Please consider a 2% tolerance on indicated measurements

CERAMIC: glossy finish

white, black

matt finish

milky white, graphite, lava grey

FOR THE COLORS MARKED
ASK FOR AVAILABILITY

http://**www.ceramicaflaminia.it**/en/products/318-sprint

©ceramicaflaminiaspa - All rights reserved. Unauthorized copying, publication, reproduction as well as partial reproduction are prohibited